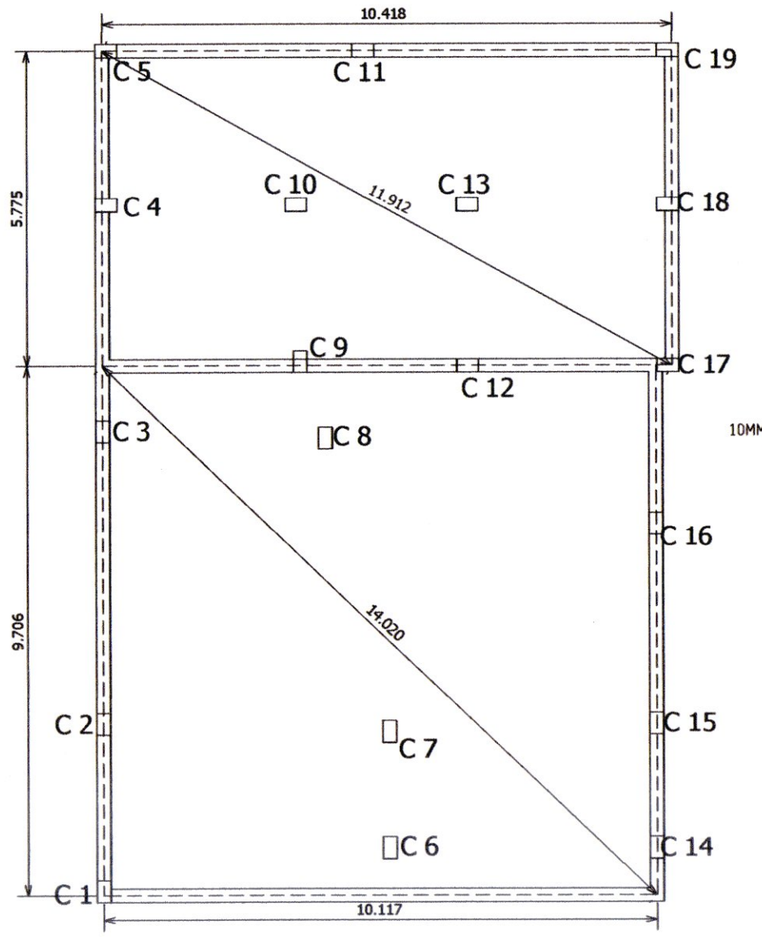

LIFT WELL

THICK NESS = 150 mm
REINFORCEMENT
Provide 10 mm bars @ 125 c/c as main bars (vertical)
Provide 10 mm bars @ 150 c/c as binder

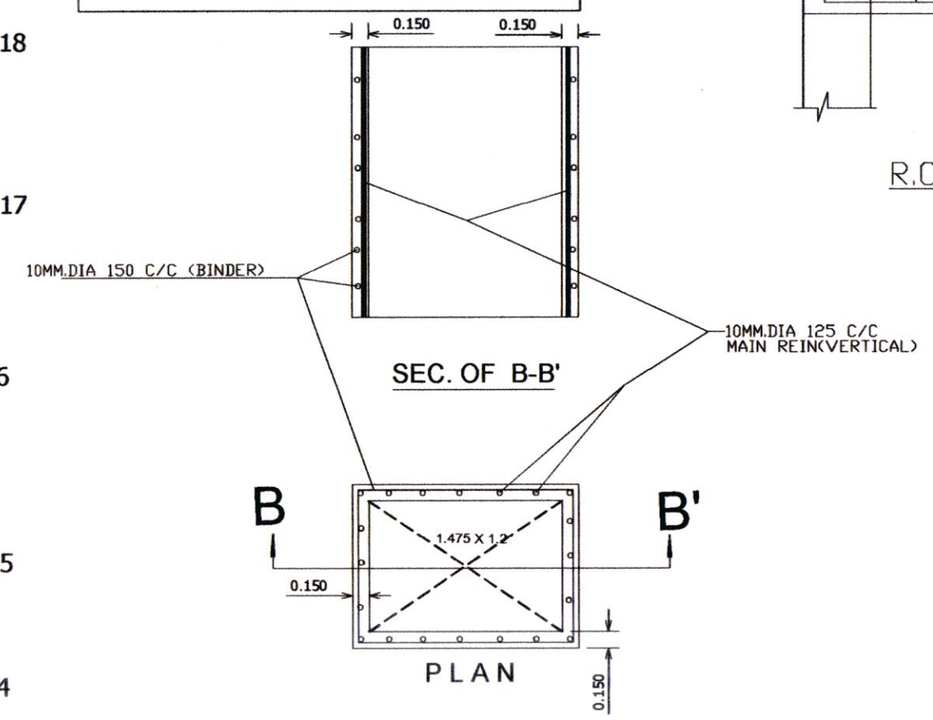

DETAILS OF LIFT WALL

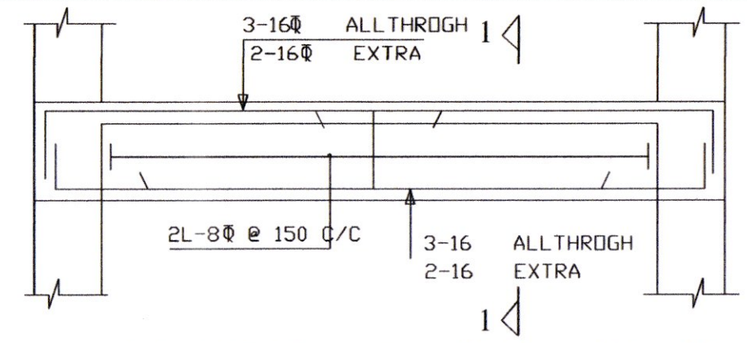

R.C. DETAIL OF BEAM MKD B1

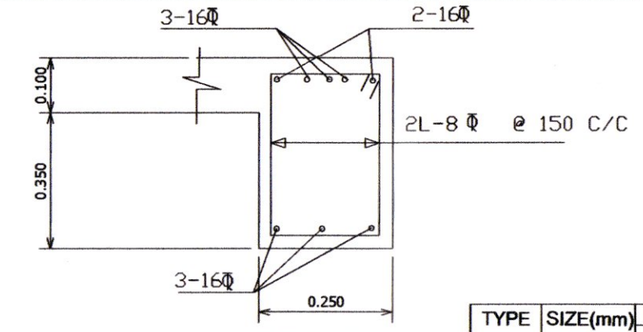

SECTION 1-1

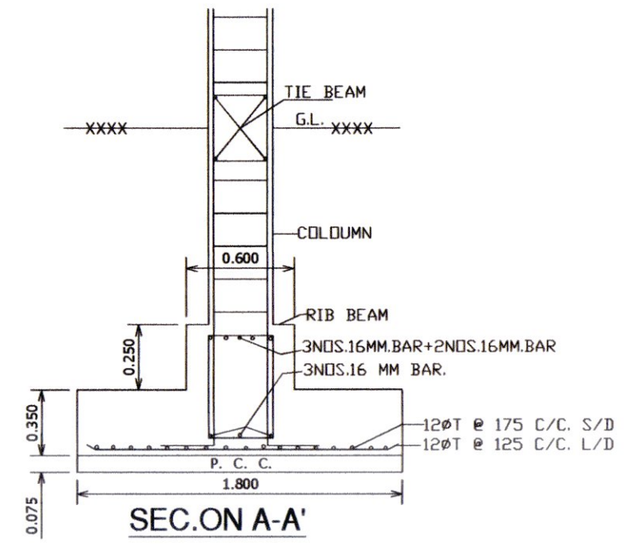

SEC.ON A-A'

BEAM SCHEDULE

TYPE	SIZE(mm)	REINFORCEMENT SUPPORT TOP	REINFORCEMENT SUPPORT BOTTOM	REINFORCEMENT SPAN TOP	REINFORCEMENT SPAN BOTTOM	STIRUP
B1	250X450	3- 16mm + 2- 16mm	2- 16mm	3- 16mm	2- 20mm 2- 16mm	2 L - 8mm @150 c/c
B2	250X400	2- 12mm +2- 16mm	3- 16mm	2- 12mm	3- 16mm +2- 16mm	2 L - 8mm @175 c/c
B3	250X400	2- 12mm +2- 16mm	2- 16mm	2- 12mm	2- 16mm +2- 16mm	2 L - 8mm @175 c/c
B4	250X450	2- 16mm	2- 16mm	2- 16mm	2- 16mm +1- 16mm	2 L - 8mm @175 c/c
Bc	250X450	TOP 2- 16mm +2- 20mm		BOTTOM 2- 16mm		2 L - 8mm @150 c/c
TIE BEAM	250X300	3- 12mm		3- 12mm		2 L - 8mm @175 c/c

SLAB SCHEDULE

TYPE	Main Rein.	Dist. Rein.
S1	Provide 8mm bars @ 125 c / c	Provide 8mm bars @ 200 c / c
S2	Provide 8mm bars @ 150 c/c both ways	
	Provide 8mm bars @ 200 c/c at edges.	

COLUMN SCHEDULE

TYPE	SIZE(mm)	REINFORCEMENT VERTICAL	REINFORCEMENT LINK	FLOOR
C7,C8	250X400	4- 16mm 6- 12mm	2 L - 8mm @150 c/c 2 number ring each se	GROUND & 1ST
C9,C10 C12,C13	250X350	4- 16mm 2- 12mm	2 L - 8mm @150 c/c	2ND
C17,C18	250X350	6- 12mm	2 L - 8mm @200 c/c	3RD
C1,C2 C3,C4	250X400	4- 16mm 4- 12mm	2 L - 8mm @150 c/c 2 number ring each se	GROUND & 1ST
C5,C6 C11,C14	250X350	4- 16mm 2- 12mm	2 L - 8mm @150 c/c	2ND
C15,C16 C19	250X350	6- 12mm	2 L - 8mm @200 c/c	3RD

PROVIDE 600X600 PEDESTAL UP TO TIE BEAM LEVEL WITH NOMINAL REINFORCEMENT FOR ALL COLUMN.

FOUNDATION SCHEDULE

FDN.UNDER COLM	TYPE	SIZE	REINFORCEMENT
C10,C12,C13,C17 C18	F1	2.6 MX2.6 M d= 350 to 500	Provide 12 MM bars @ 125 c/c both ways
C1,C2,C3,C4,C5, C11,C14,C15,C16 C19	F2	2.2 MX2.2 M d= 350 to 500	Provide 12 MM bars @ 150 c/c both ways
C8 & C9 (COMBINE)	F3	1.8 M X 3.475 M d= 350	Provide 12 MM bars @ 125 c/c in short span Provide 12 MM bars @ 175 c/c in long span
C6 & C7 (COMBINE)	F4	1.8 M X 4.325 M d= 350	Provide 12 MM bars @ 125 c/c in short span Provide 12 MM bars @ 175 c/c in long span

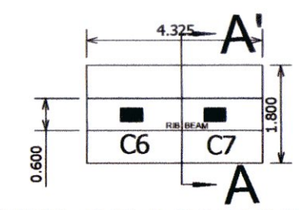

DETS.OF COMBINED FOOTING(F-4)

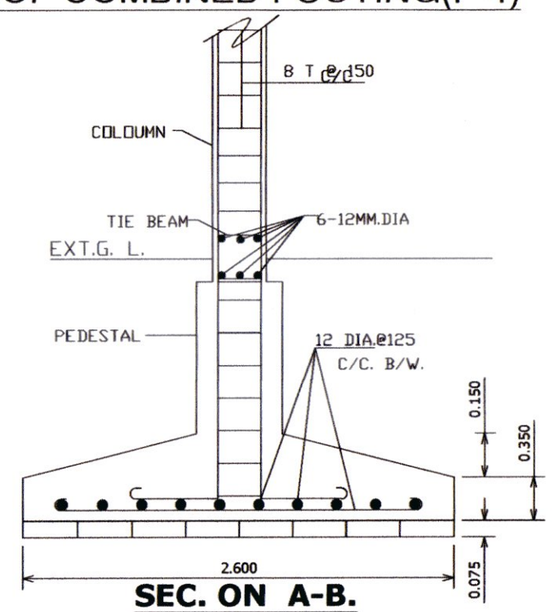

SEC. ON A-B.

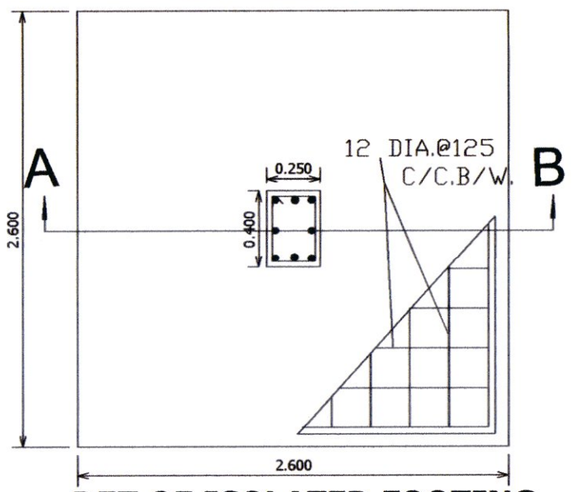

DET.OF ISOLATED FOOTING
(F1 TYPE)

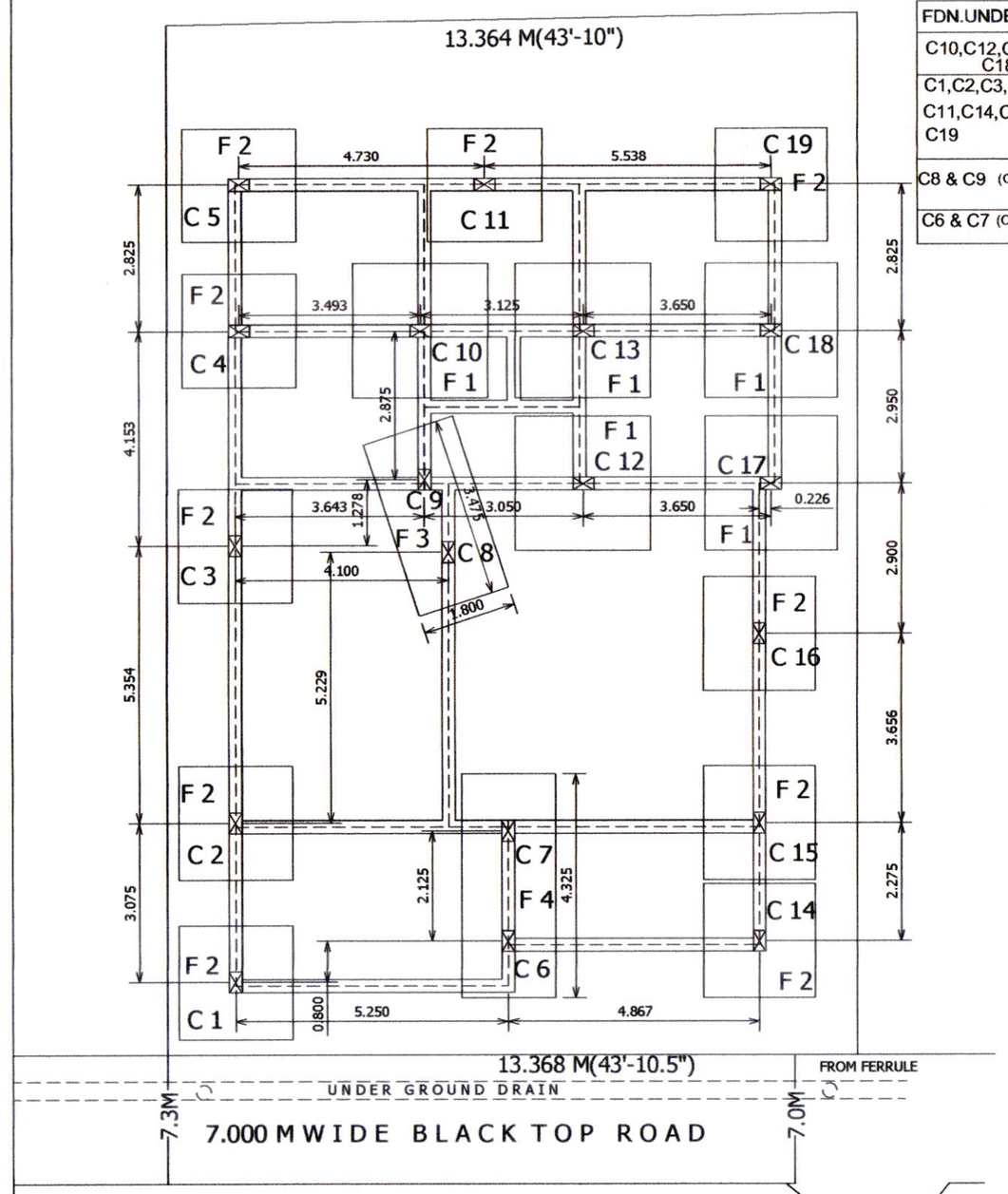

COLUMN LAYOUT PLAN
SCALE - 1:1

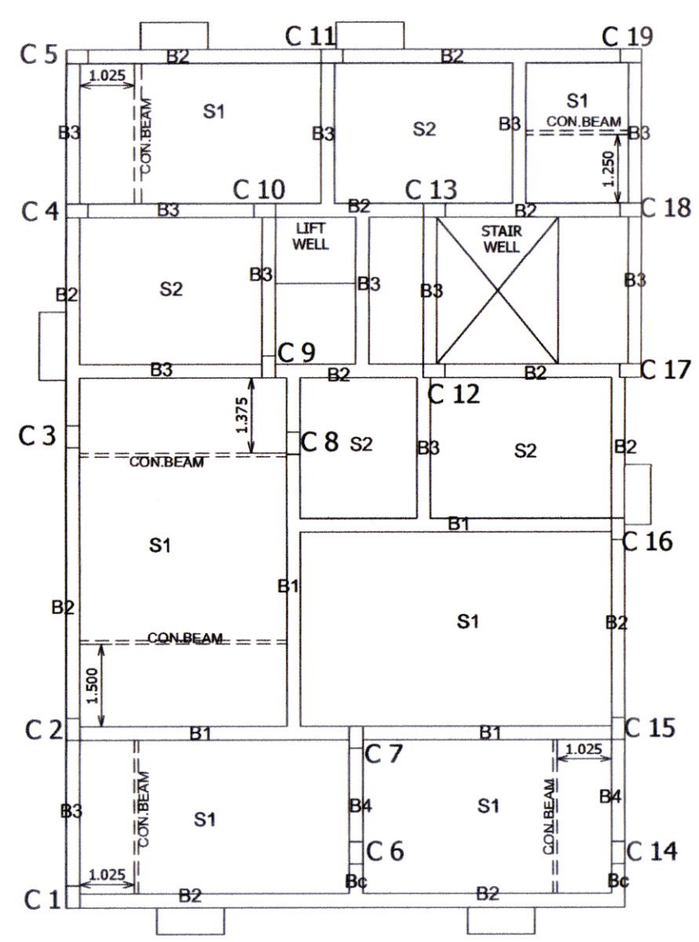

SLAB & ROOF BEAM LAYOUT PLAN
SCALE - 1:1

PROPOSED FOUR STORIED RESIDENTIAL BUILDING

TO BE CONSTRUCTED AT

HOLDING No. 199/1, PEYARA BAGAN, WARD No. 31,
MOUZA-LASKARPUR, J. L. No. 57. L. O. P. No. 467; C. S. & R. S. DAG No. 782
L. R. DAG No. 2340.
P. S. NARENDRAPUR (PREVIOUSLY SONARPUR), DIST-24PGS(s).
RAJPUR SONARPUR MUNICIPALITY.

OWNER :- SRI SUSHANTA DAS, SMT AMITA SAHA, SMT MITHU SAHA AND SRI SOMNATH SAHA

GENERAL NOTES

1. ALL DIMENSIONS ARE IN METER UNLESS NOTED OTHERWISE
2. FIRST CLASS BRICKS SHALL BE USED FOR ALL 250 MM / 200 MM THICK OUTER WALLS IN CEMENT MORTER (1:6) AND 125 MM / 75 MM THICK INNER WALLS IN CEMENT MORTER (1:4)
3. H.B. WIRE NETTING SHOULD BE USED AT EVERY THIRD LAYER FOR 75 MM THICK WALLS
4. GRADE OF CONCRETE : ORDINARY CEMENT CONCRETE MIX (1:1.5:3) WITH 20 MM DOWN GRADED STONE CHIPS
5. GRADE OF STEEL : Fe-510
6. LAP LENGTH & COVER TO REINFORCEMENT SHOULD CONFORM TO LATEST EDITION OF I.S.: 456
7. PLASTERING:
   OUTSIDE - 15 MM THICK IN CEMENT MORTER (1:4)
   INSIDE - 20 MM THICK IN CEMENT MORTER (1:6) FOR 250 TH. WALL
   15 MM THICK IN CEMENT MORTER (1:6) FOR 200 TH. WALL
   CEILING - 10 MM THICK IN CEMENT MORTER (1:4)
8. DEPTH OF WATER RESERVOIR & SEPTIC TANK WILL NOT EXCEED THE DEPTH OF FOUNDATION

N

DECLARATION OF E.B.S :-

IT IS CERTIFIED THAT THE BUILDING PLANHAS BEEN DRAWN UP AS PER PROVISION OF R.S.M. BUILDING RULES 2009 AS AMMENDED FROM TIME TO TIME & THAT THE SITE CONDITION INCLUDING THE WIDTH OF ABUTTING ROAD CONFORM WITH THE PLAN & THAT IT IS A BUILDABLE SITE & (AS INFORMED BY THE OWNER) NOT A TANK OR FILLED UP TANK.